www.radio-workshop.co.uk

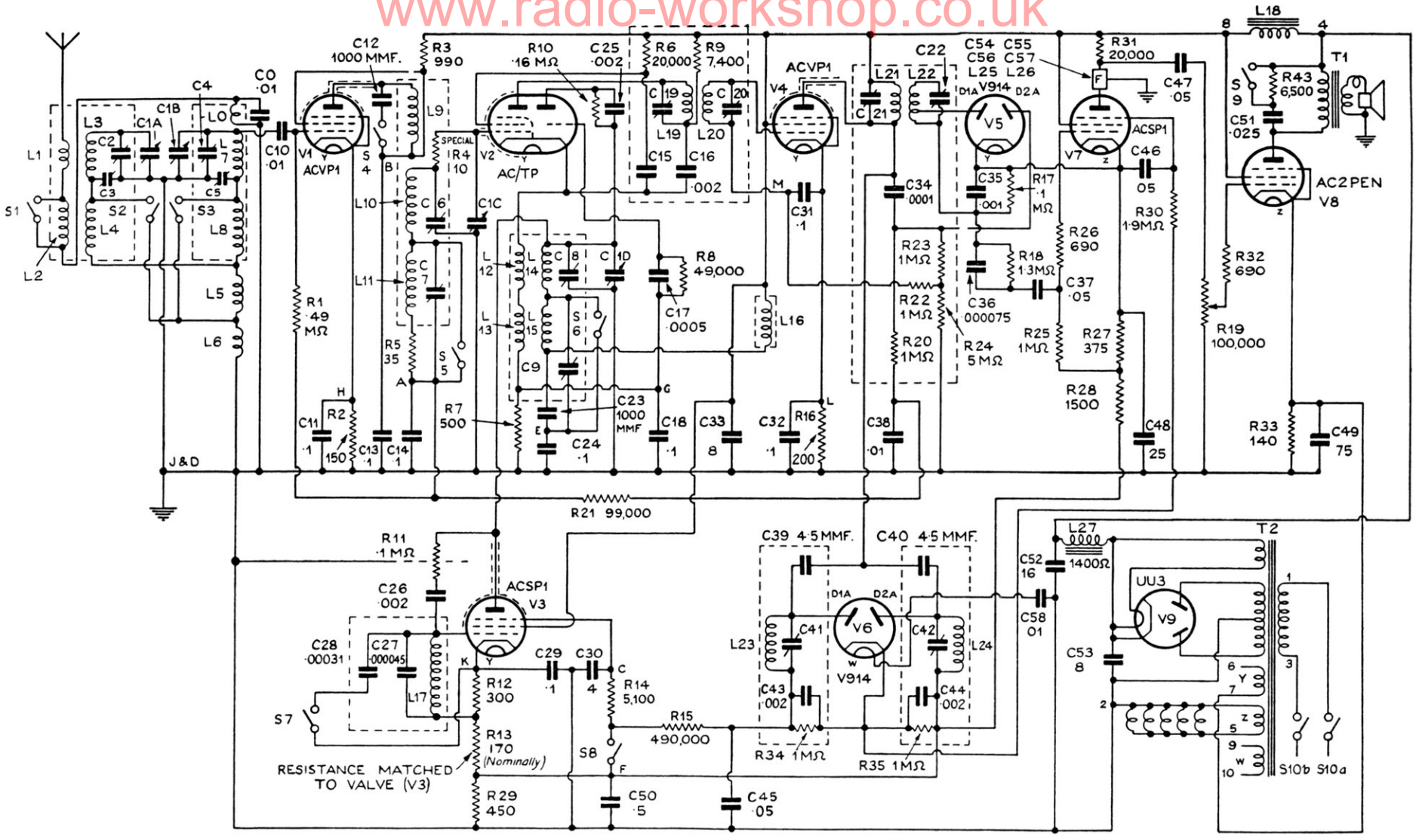

A28C CIRCUIT DIAGRAM