www.radio-workshop.co.uk

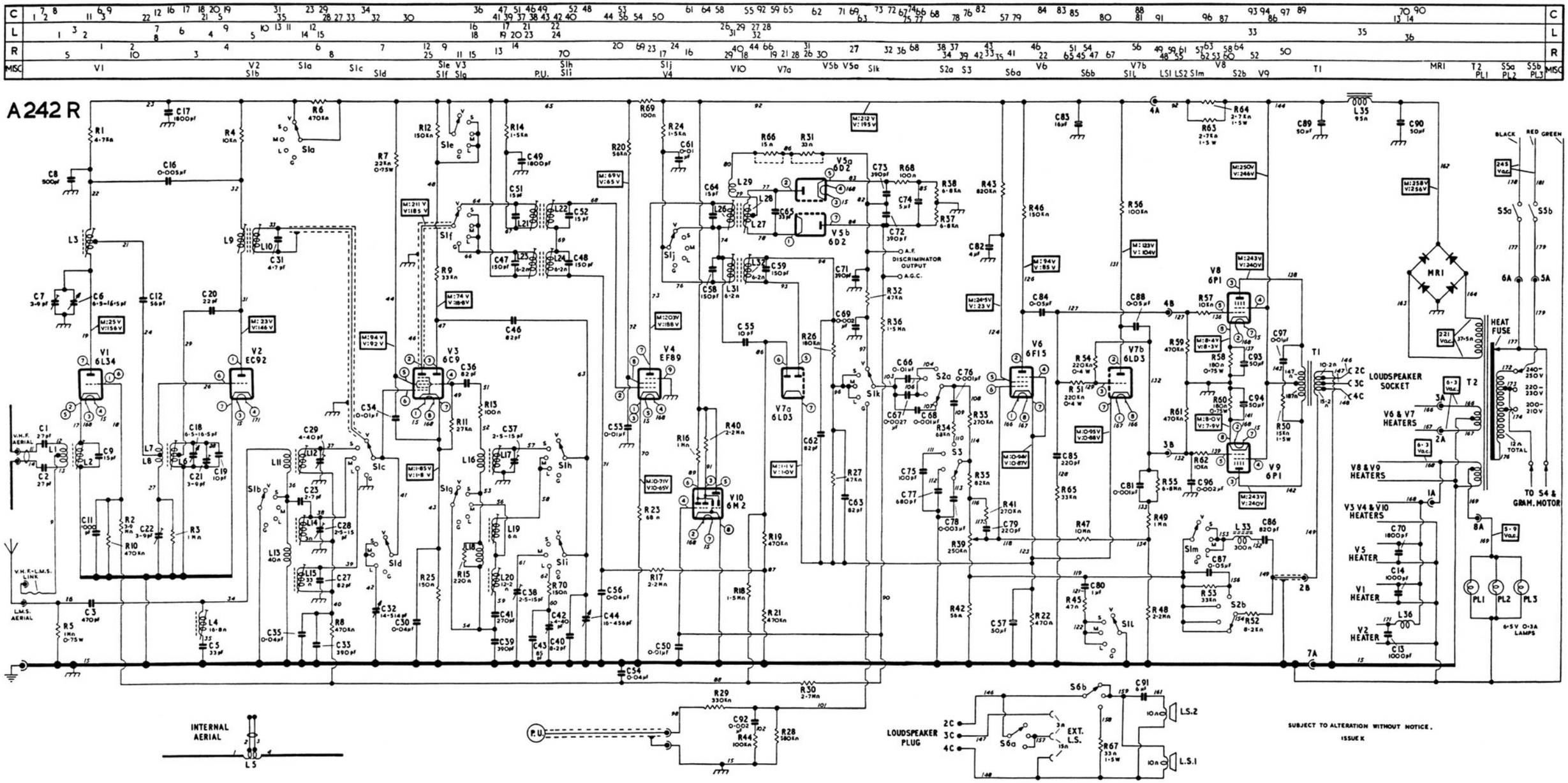

The Wave-band switch (S1a–S1m) is shown in the Band II position while the Bass (S2a–S2b) and Treble (S3) tone switches are shown in their minimum response (4) positions respectively. The Loudspeaker switch (S6a–S6b) is shown in the Internal position.

Circuit voltages are shown within rectangles and were measured under no-signal conditions using a 20KΩ/V meter, with the receiver switched first to the M band and then to Band II. Where the voltage readings differed appreciably, both are quoted with the M band reading at the top.

The d.c. resistance is quoted for all coils excepting where the value is less than one ohm.

Component terminals and connecting leads are identified by test point (t.p.) numbers which correspond with those appearing on the chassis diagrams. The valve pin numbers are shown in small circles.